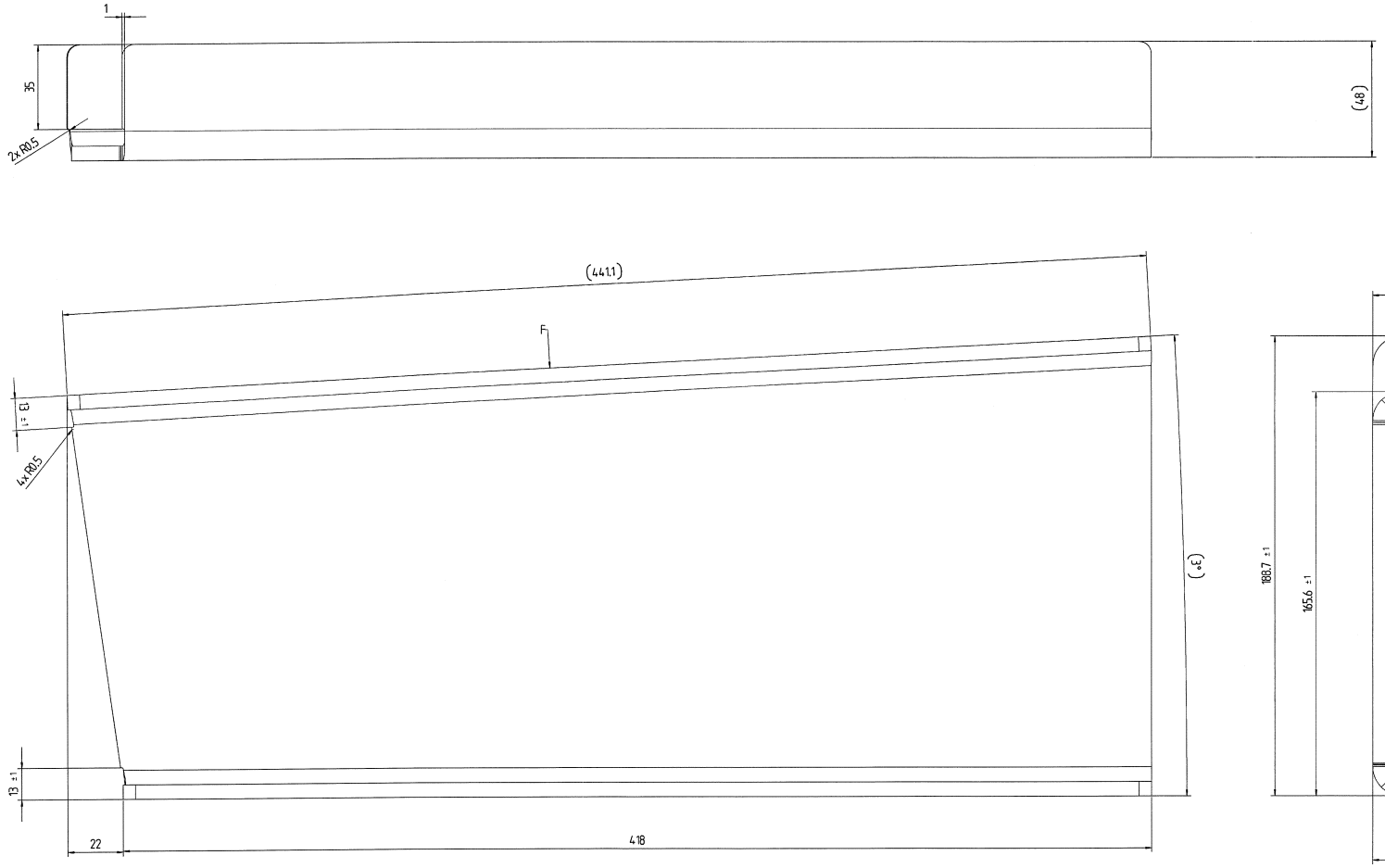

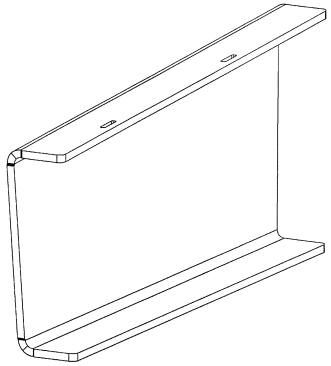

View following F

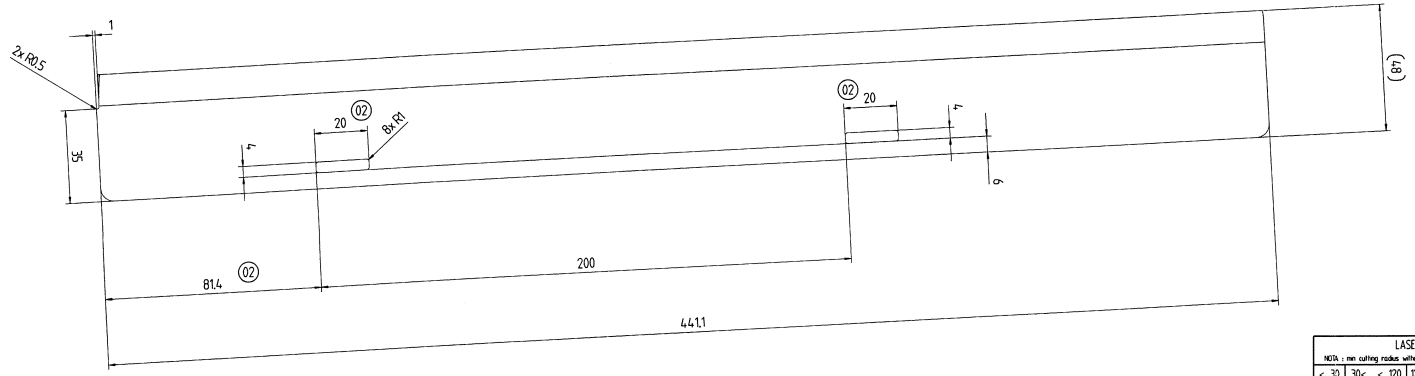

PŘEKLAD
dne: 17. 12. 2014
PROVEDL/A
VÁŇA

TLOUŠŤKA MAT.
NEMÁT. RADIUS
RADIUS OHYBU

- 2 -03- 2015
ARCHIV
1

NOTA :

- Metal sheet thickness : 6 mm
- Radii without dimension : R = 5
- Bend radii : R = 6

Condition at time of delivery	
de-scaled (degree of purity SA 2 1/2 acc. ISO 8501-1)	X
without burrs acc. WN 11310	
Permissible top-end rounding during flame cutting (also positive bead acc. WN 10572)	
oil-free / free of grease	
oiled	
oiling permissible	X
Indicate the required condition at time of delivery with an X.	

LASER cutting tolerances				
NOTA : mm cutting radius without dimensions R = 1 mm unless otherwise specified				
≤ 30	30< ≤ 120	120< ≤ 400	400< ≤ 1000	1000 <
± 0,5	± 0,8	± 1,0	± 1,5	± 2,0

+0.5 / -0.5

First angle projection

General tolerance (GT) in mm
Size range: ≤ 30 | > 30 ≤ 120 | > 120 ≤ 400 | > 400 ≤ 1000 | > 1000

GT coarse

L	1	2	2	3	4
∢	1	2	4	6	

Lengths (L) and angle (L.L. ∠) = ± GT

Tolerance Symbols ISO 1101
- ○ roundness = 1/2e-Tol.
- ⏥ straightness/flatness = GT
- ◎ concentricity/run out = GT
- ⌯ symmetry = GT
- / / parallelism = GT
- ⊕ position = GT

Languages: en,fr

Index	alteration	Change no	Fit	Toler.
02	Dim. 12 --> 20	T62488		
	Dim. 85.4 --> 81.4			

Inspection dim. ( )
Auxiliary dim. ( )

	Date	Name
Drawn	9.10.2014	J.Fanteny
Checked	12.11.2014	T.Malivert
Authid	17.11.2014	R.Pelletier
M.check.	17.11.2014	J.LeCosne

Confidential document
Refer to protection notice ISO 16016

Material: S235JR following EN10025-2
Blank no:
Title: side panel front right
Drawing number: / / 11914012106
Weight: in Kg 5.1
PROD.
Scale 1:1
Sheet: 1 of: 1
Repl.
Orig.
11914012106d003
A1
Approved